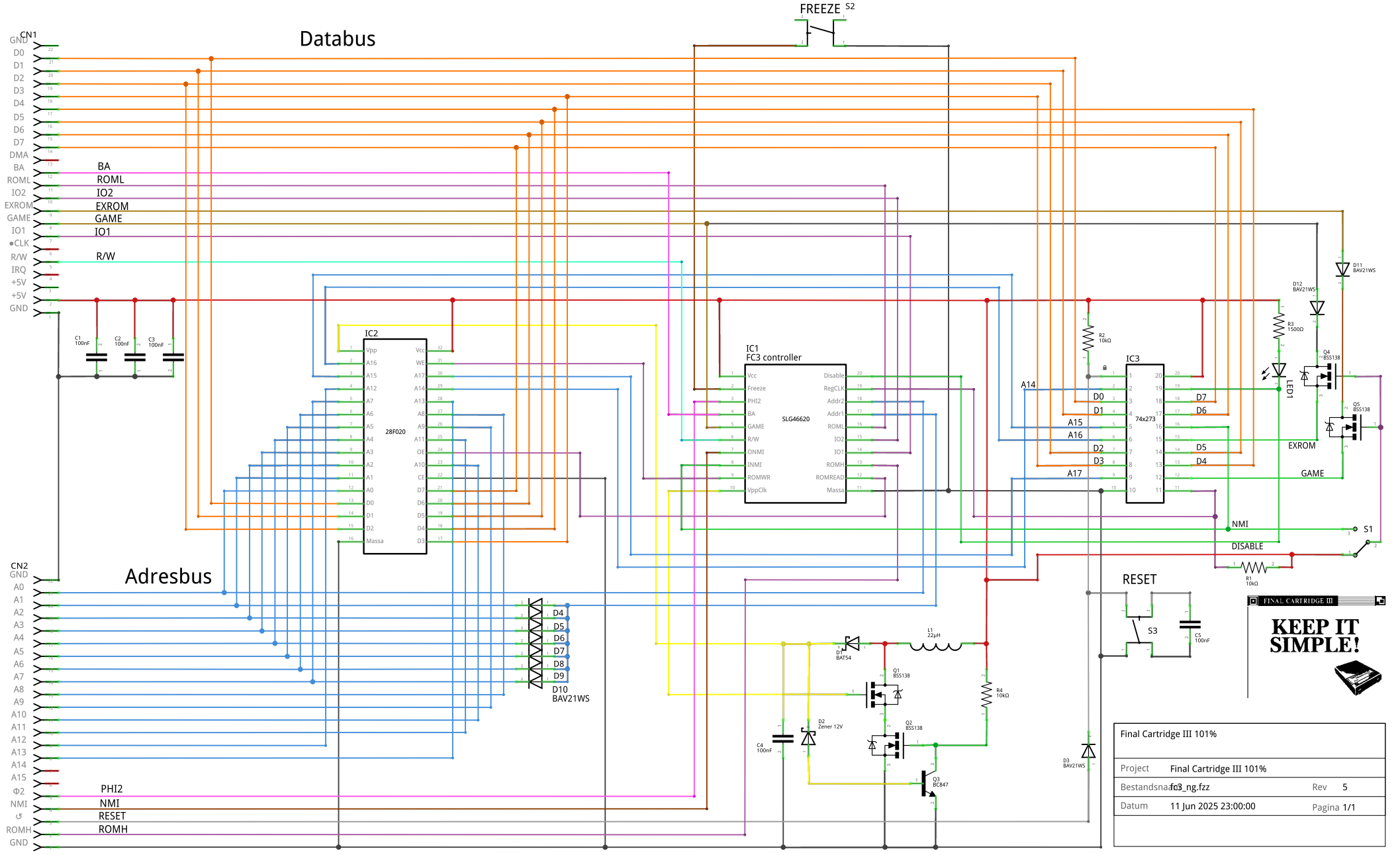
Databus
Adresbus
CN1
CN2
FREEZE
S2
IC1
FC3 controller
SLG46620
IC2
28F020
IC3
74x273
C1 100nF
C2 100nF
C3 100nF
R1 10kΩ
R2 10kΩ
R3 1500Ω
R4 10kΩ
L1 22µH
C4 100nF
C5 100nF
D1 BAT54
D2 Zener 12V
D3 BAV21WS
D10 BAV21WS
D11 BAV21WS
D12 BAV21WS
Q1 BSS138
Q2 BSS138
Q3 BC847
Q4 BSS138
Q5 BSS138
LED1
S1
S3
RESET
NMI
DISABLE
EXROM
GAME
A14
A15
A16
A17
D0
D1
D2
D3
D4
D5
D6
D7
D8
D9
BA
ROML
IO2
IO1
R/W
PHI2
ROMH
FINAL CARTRIDGE III
KEEP IT SIMPLE!
Final Cartridge III 101%
Project Final Cartridge III 101%
Bestandsnaam fc3_ng.fzz
Rev 5
Datum 11 Jun 2025 23:00:00
Pagina 1/1
fritzing